PULP PAPER & LOGISTICS

VOLUME 10 NUMBER 49 JULY/AUGUST 2018

VOITH: Wet-wipe manufacturing with the environment in mind

Page 10

LOGISTICS

ANDRITZ

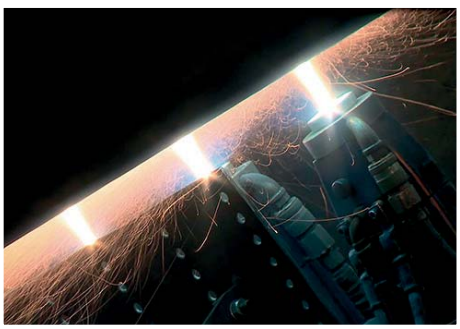

VALMET

COMMENT

Welcome to the July-August issue of Pulp, Paper & Logistics. As with every issue we have some fantastic articles to bring you plus all of our regular news, products and project sections.

In this issue we offer some interesting insights into topical subjects covering the production and processing of tissue, paper, board and packaging. Other areas of importance such as energy saving, logistics and water use and treatment are also covered throughout the year.

The vast majority of the articles published in the magazine will have been supplied to us before any other trade media, making them essential reading. The popularity of this is shown by the volume of times that each of our full pdf issues of the magazine are being shared beyond the registered readership.

The next issue is our 50th and we will be celebrating the event with a September-October edition that will preview the 25th anniversary MIAC 2018 show in Lucca, and cover tissue machinery and equipment along with associated technology plus recycling technology and trends.

Have a great summer and see you in Lucca.

Vince Maynard

IN THIS ISSUE

Vol. 10 Issue No. 49, July/August 2018

ISSN 2045-8622 (PRINT)

PUBLISHER & EDITORIAL DIRECTOR
Vince Maynard
Tralee, Hillcrest Road, Edenbridge, Kent, TN8 6JS, UK
Tel: +44 (0) 1732 505724
Mobile: +44 (0) 7747 002286
Email: pulppaperlogistics@virginmedia.com

CONSULTANT EDITOR
David Young
Tel: +44 (0) 1737 551687
Mobile: +44 (0) 7785 796826

EDITORIAL ADVISOR
John Nutting
Email: johnnutting47@gmail.com

REGIONAL REPRESENTATIVE
Einar Johansson
Tel: 0046 8 540 255 15
Mobile: 0046 70 234 80 85
Email: einar.lennart@gmail.com

PRODUCTION
Anthony Wiffen
ASTAC Business Publishing Ltd
Tel: +44 (0) 1622 850063
Mobile: +44 (0) 7557 280 769
Email: anton_print_1@mac.com

PRINTER
Brown Knight and Truscott
Tunbridge Wells,
Kent, TN2 3BW
United Kingdom
Tel: +44 (0)1892 511678

FSC www.fsc.org MIX Paper from responsible sources FSC® C020424

PULP PAPER & LOGISTICS

Andritz acquisition completes its nonwoven business portfolio

Technology specialist Andritz says it has completed its product portfolio in nonwoven systems with the acquisition of a controlling stake in an Italy-based manufacturer of converting machines for the hygiene and food packaging industries.

Andritz has bought a 70 percent stake in Diatec SRL, which designs and manufactures a wide range of special machines mainly for the production of baby diapers and other absorbent hygiene products, but also for food packaging.

The remaining 30 per cent stake of the company, based at Collecorvino in the Pescara region will stay in the hands of the two current shareholding families.

Andritz says it is now able to offer the complete supply and value chain in nonwovens, from the raw material, to webforming, finishing, and converting.

Diatec was founded in 1992 and has developed with many customers around the world.

Its owners and managers, who will continue to work in the company, said that Andritz is the best partner to support the company's long-term growth and – together with employees and suppliers – to create synergies that can satisfy the demands of its customers.

Andreas Lukas, division manager for Andritz Nonwoven, says: "We are very excited about this complementary acquisition that extends our market coverage, process technology, and product range within the nonwovens industry."

Diatec's general manager, Luigi Mancini, added: "With Andritz, we have found our ideal partner to strengthen our international market position and we are looking forward to growing further within this collaboration."

Stora Enso invests in green energy generation at Maxau Mill

A new steam turbine with a closed-loop cooling system and additional biomass storage is to be installed at Stora Enso's Maxau paper mill in south west Germany. The €25 million investment will reduce carbon emissions and the mill's environmental impact on the River Rhine.

Stora Enso says it wants to secure the long-term profitable energy production in Maxau – which has two paper machines and capacity to make 530,000 tonnes of uncoated magazine papers per year – with increased electricity generation and higher efficiency. The new 57MW extraction-condensing turbine will complement the existing combined heat and power (CHP) plant which started up in 2010.

"We are happy to announce this important investment which underpins our long-term commitment to serve our customers with high-quality paper products from cost-efficient and sustainable operations. It also highlights our ambition to replace fossil-based materials and to contribute to a greener economy," said Kati ter Horst, head of Stora Enso's Paper Division.

The project will start later this year with a target for completion in 2020.

Stora Enso's sales in the second quarter were up 5.4 percent at €2.66 billion, with operational EBIT up almost 50 percent at €327m, compared with the same period in 2017.

Maintenance costs in the quarter were €15m higher than expected, but annual maintenance shutdowns will cost €5m less, the papermaker said in its outlook for the year.

"Six consecutive quarters of sales growth prove that we have reached a level of sustainable profitable growth," commented chief executive Karl-Henrik Sundström. "Sales increased by more than 5 per cent during the quarter and if we exclude the divested Puumerkki, the increase was 7 per cent. This is primarily due to favourable prices and our management of the product mix."

In May, Stora Enso inaugurated a €12 million wood-fibre-based biocomposite plant – said be Europe's largest – at its Hylte Mill in Sweden.

Pulp Paper & Logistics

Kwidzyn mill restarts its PM3 line after fire

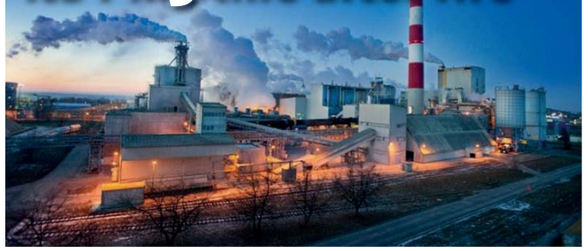

Production at International Paper's PM3 newsprint and kraft paper machine at Kwidzyn in Poland was restarted at the end of June.

The machine, with 115,000 ton per year capacity, was damaged in a fire at the mill in March, since when it had been out of action.

The company said that the damage was mainly related to electrical cabling, but not to the systems for paper production.

The Kwidzyn mill manufactures high-quality office paper, for use in printers and copiers; offset paper for the printing of reports, books, manuals, posters, advertisements, inserts and leaflets; coated paperboard for the manufacture of, for example, pharmaceutical packaging and luxury packaging for cosmetics or confectionery products; as well as newsprint made from 100 per cent recycled waste paper.

Novimpianti acquired by Andritz

Andritz has agreed to acquire Italy's Novimpianti Drying Technology, which provides engineered equipment and services for air and energy systems to the paper industry's leading manufacturers.

Based in Lucca, Novimpianti is owned by Novigroup Srl, has 40 employees and yearly sales of about €10 million.

Andritz said the acquisition strengthens its products in air and energy systems, mainly for tissue and paperboard machines.

"We are very excited about this complementary acquisition that extends the Andritz market coverage and product range in Tissue and Paper," said Michael Pichler, manager of Andritz's global paper and tissue division.

Chief executive of Novimpianti Pietro Saccomano, added: "The ambitions of Andritz to further grow in the tissue and paper business and their international position were decisive for the decision to hand over our company and know-how to them. The sale of Novimpianti will grant Andritz continuous growth in the area of air and energy systems based on the solid foundation we have built during the past decades."

Andritz to buy machine clothing leader Xerium

Austria-based technology giant Andritz has agreed to acquire US-based paper machine clothing manufacturer Xerium in a deal worth around US$833 million.

The cash deal, which includes financial liabilities of $590m, is expected to be completed in the second half of 2018, subject to regulatory approvals.

Based in Youngsville, North Carolina, Xerium manufactures machine clothing (forming fabrics, press felts, drying fabrics) and roll covers for paper, tissue, and board machines, including maintenance and aftermarket services. It has around 2,850 employees at more than 28 facilities worldwide and last year its sales were $481m.

President of Andritz Wolfgang Leitner commented: "With Xerium, we will be acquiring a high-tech global supplier providing essential services and wear parts to the paper industry. The acquisition fits squarely with our long-term strategy to execute complementary acquisitions and to grow our aftermarket business with its stable source of revenue and earnings."

Sun Paper close to gaining approval for Arkansas paper mill

Concerns that the Chinese government could introduce restrictions on highly-leveraged projects in the US in response to President Trump's tariff proposals have heightened efforts to complete the preparatory work on Sun Paper's $1.8 billion paper mill in South Arkansas.

Mike Preston, an executive with Arkansas's Economic Development Commission (AEDC) recently met bosses at Sun Paper in Shangdong Province where the size of the project was increased and switched to producing linerboard.

The AEDC said the switch was made to keep up with the demand for cardboard boxes, in part due to the increase in next-day delivery and online shopping. That also led to a delay in the Sun Paper's protracted environmental permitting process with the state Department of Environmental Quality.

AEDC spokeswoman Brandi Hinkle said the Chinese paper maker is close to completing the last of four permit applications that must be approved by ADEQ before construction can begin on the South Arkansas project.

At a press conference in June, Governor Asa Hutchinson said that Preston's trip was partly to shore up concerns that the Chinese trade officials had with President Donald Trump's "escalating rhetoric" to impose around $200 billion in tariffs on imported goods from China.

Beijing government officials have also recently put some restrictions on large, heavily-leveraged projects by Chinese companies in the US.

"That's what we are looking at carefully as to what impact the tariffs have on the cost of developing and continuing those investments," said Hutchinson. "We have been assured by Sun Paper that they are fully committed to the project [although] there is some concern about the tariffs. But that was part of the discussion with the [Chinese] trade ambassador that hopefully we worked through those issues."

More about Sun Paper in China: see page 16.

Another EcoVadis gold rating for Metsä Board

Metsä Board, which produces premium fresh fibre paperboards in Europe, has been awarded the Gold level rating by EcoVadis for the second year for its approach to sustainability and corporate social responsibility.

Overall, Metsä Board was ranked in the top one per cent of suppliers assessed by EcoVadis across all categories.

"This is a significant achievement, as the EcoVadis assessment is becoming an increasingly important guide for our customers when judging their suppliers' sustainability and corporate social responsibility performance. We recognise that sustainability must go beyond regulatory compliance to also focus on how companies manage their economic, social, and environmental impacts, as well as their relationships with stakeholders such as customers, employees, suppliers and government," said Anne Uusitalo, director of product safety and sustainability at Metsä Board.

Anne Uusitalo, director of product safety and sustainability at Metsä Board

Beyond the Box promotes cartonboard packaging in the UK

A campaign to promote the benefits of corrugated cardboard has been launched by The Confederation of Paper Industries in the UK, to help consumers make the best decisions for packaging.

Bringing together experts from leading UK packaging companies, Beyond the Box follows growing media interest about the environmental impact of packaging, new government policy and the plastic-free packaging strategies adopted by leading retailers.

To mark the campaign's launch, Beyond the Box released exclusive new research which reveals a surge of interest in packaging among the general UK population.

Two in three Britons admit they're worried about packaging and the types of materials used to package their favourite products, according to specially commissioned research, which surveyed more than 2,000 UK consumers.

The research revealed that consumers are so concerned about packaging that they are making changes to their purchasing habits. Almost three in five of those questioned (57 per cent) revealed they are avoiding plastic bags in the supermarket, seeking recycled packaging or supporting local businesses such as greengrocers, butchers and fishmongers in an attempt to ease their worries.

What's more, the nation's trepidations are growing. More than a third (38 per cent) of UK adults are more troubled by packaging now than this time a year ago.

'Waste', 'frequent print, online and broadcast news items on packaging', and 'footage of ocean waste in Sir David Attenborough's recent Blue Planet II series' are among the biggest factors fuelling personal anxiety over packaging choices – cited by 59 per cent, 40 per cent and 31 per cent of 'worried' respondents respectively.

A number of worriers (17 per cent) revealed packaging was now so high up the agenda, it has become 'socially unacceptable' not to care about packaging's impact on the environment. Some (6 per cent) even admit that they have come under pressure from friends and family to think more carefully about their packaging choices.

CPI's Andrew Barnetson: "Corrugated cardboard is the sustainable packaging choice"

Meanwhile, for an astonishing 2.7 million Britons (5.3 per cent), packaging is currently the 'biggest' concern in their lives.

Despite the nation's clear concern, according to those surveyed, responsibility for addressing and improving the UK's record on packaging lies at the doors of food and drink manufacturers (cited by 41 per cent of worriers), government (41 per cent) and packaging suppliers (39 per cent).

Fewer than one in five (18 per cent) believe that consumers have primary responsibility to improve the UK's record on packaging.

Plastic is the material that concerns Brits the most, with 80 per cent of packaging worriers naming it as a material which causes them the most anxiety. In contrast, paper and cardboard are some of the least concerning packaging materials for Britons, with just 8 per cent and 6 per cent of worriers naming these as anxiety-inducers.

Beyond the Box spokesperson, Andrew Barnetson, explained: "Interest and concern about the UK's packaging supply chain has never been higher.

"This new report from Beyond the Box shows packaging is a subject which has shot up everyone's agendas. Britons are changing the way they shop and make purchasing decisions, major high street retailers are reducing their use of single-use packaging, and the Prime Minister has vowed to eliminate the UK's avoidable plastic waste by 2042."

"Our research shows that no type of packaging is immune from criticism, so it is vital that we help to inform the debate.

"There is a fantastic opportunity for a sustainable, renewable and recyclable material like corrugated cardboard to play a leading role in helping consumers, government and industry reach exacting targets that are being set to improve the UK's record on – and ultimately ease consumer concern about – packaging.

"This is a pivotal moment for the UK packaging industry and Beyond the Box will help to ensure that corrugated cardboard has a clear role in helping to find the solutions we all seek."

Beyond the Box has created a dedicated resource – www.cardboard.org.uk – to help consumers, media and retailers learn more about what makes corrugated cardboard special – and the UK's sustainable packaging choice.

Japanese paper maker starts building mill in Vietnam

Construction has started on a US$15 million-plus paper mill in Vietnam for United Packaging Co, part of Oji Holdings Corporation, one of Japan's leading paper and packaging groups.

The mill is being built on a five-hectare site at Tan Phu Trung Industrial Zone (IZ) in the Cu Chi district the capital, Ho Chi Minh City. It is expected to start production in May 2019.

BW Papersystems acquires K&H Machinery in China

US-based BW Papersystems, which supplies equipment to the global paper industry, has acquired China's Dongguan K&H Machinery Co.

K&H manufactures complete machines to create corrugated sheets with some of its well-known products including its N.C. Slitter Scorer and Positive Pressure Singlefacer.

With operations in Dongguan, China, and Taiwan, K&H has sold products in Asia, Central and South America, and Europe for the past 30 years.

"We have partnered with K&H for a long time," said Neal McConnellogue, president of BW Papersystems. "By merging the two companies, BW Papersystems will step into our broader vision and open ourselves to new customer opportunities."

K&H Machinery is now part of BW Papersystems. Chairman of K&H Wu Kuan Hsiung (left) with Eddie Mun, newly appointed managing director of K&H

Eddie Mun, newly appointed managing director of K&H in Dongguan, added: "K&H equipment, combined with the technology of our MarquipWardUnited brand, will meet the increasing demand for automation in Asia."

Chairman of K&H Wu Kuan Hsiung will continue to consult on innovation and business matters as the K&H and MarquipWardUnited product lines merge equipment and technology.

"I look forward to continuing K&H's and BW Papersystems' progress in the global corrugated market," he said.

Wisconsin paper maker to build 'state-of-the-art' mill

Green Bay Packaging, in Green Bay, Wisconsin, has confirmed that it will be replacing its 71-year-old paper mill with a 'state-of-the-art' facility in the same location.

Costing $500 million, the project will be the largest investment in the paper maker's history and the first mill to be constructed in the state for 30 years.

The mill is being constructed in response to demand for boxes and corrugated paper for online shipping.

Green Bay has ordered an XcelLine testliner line from Voith which will be 7.62 metres wide and have a design speed of 1,200 metres per minute and a VariFlex winder. The package also includes paper machine clothing, a seven-year Total Roll Management contract for several machines, and Papermaking 4.0 products.

"Partnering with a family-owned company whose North American headquarters is in Appleton, Wisconsin, Green Bay Packaging is advancing its commitment to positively impacting the local economy and becoming a more sustainable producer. We appreciate Voith's ability to get this advanced paper machine fully operational on a condensed timeline to help meet our customer demands," said Will Kress, chief executive of Green Bay Packaging."

"Voith is proud of this historic project, and we are eager to continue our strong partnership with Green Bay Packaging," said Martin Jauch, president of business line projects at Voith Paper North America.

Green Bay Packaging says the mill will feature a number of environmental upgrades. The coal boiler will be replaced with two natural gas boilers to reduce fuel emissions. The plant will also use a recirculating water system that will not put wastewater into the Fox River or the Bay.

Green Bay Packaging was started by George Kress in Green Bay in 1926 and began producing corrugated boxes in 1933. Since then, the company has grown to house 30 different divisions in 14 states and employs more than 3,500 people across the US, but remains based in Green Bay and privately owned by the Kress Family.

Green Bay Packaging's new mill will be 'state-of-the-art' when it starts up in 2021

Wisconsin is the leading producer of paper products in the United States, which means that a large portion of the Wisconsin economy is reliant on the paper industry. Since 1994, however, 15 mills have closed and 20,000 jobs have been lost. Since its peak around the year 2000, the paper industry in Wisconsin has felt the impact of changes in technology, which created a lower demand for books, newspapers, and magazines, but an increased demand for boxes and corrugated paper for shipping.

In May, Green Bay Packaging acquired Wisconsin Packaging Corp, in Fort Atkinson, Wisconsin, which specialises in the design and manufacture of corrugated packaging and retail displays for clients throughout the US.

"Wisconsin Packaging is proud to become a member of Green Bay Packaging," said Fred Negus jnr, president Wisconsin Packaging. "Our family has grown our business in Fort Atkinson, our goal always being to provide for the ever-changing needs of our customers. We are especially grateful to our employees and our community who have supported us. To stay competitive, we emphasize continuous improvement in technology, efficiency and design. This new bond with Green Bay Packaging strengthens our abilities to meet these goals."

Will Kress of Green Bay added: "The acquisition of Wisconsin Packaging Corp. provides an exciting opportunity for Green Bay Packaging. It allows us to grow our company with an organization that aligns with a similar business philosophy of excellent quality, service and dedicated employees. Wisconsin Packaging Corp is geographically and strategically a great fit for our company but most important is the alignment of its leadership and cultural approach to business."

Strong performance for pulp and paper industries in Europe

The pulp and paper industry performed well in Europe last year, with production and investment both up compared with 2016, according to CEPI, the association representing the pulp and paper industry in Europe.

Despite a 'challenging' global environment, consumption of paper was up by 0.5 per cent, and production at mills was up by 1.5 per cent. Exports were particularly strong with a 5.2 per cent increase from 2016.

The CEPI said latest investment figures also bode well for the industry's ambitious investment agenda. Investment in 2017 grew by 7.5 per cent at more than €5 billion, which is aligned with the transformation outlined in the industry's 2050 'Investment Roadmap'.

"The 2017 figures demonstrate that the European pulp and paper industry is achieving a phenomenal turn around. Whether it is production, added value or exports, all key indicators are positive. The current level of investment, not seen since 2005, is indicative of industry's self-confidence and the acceleration of its transformation," said Sylvain Lhôte, CEPI director general.

Paper recycling improved despite the introduction in 2017 of the Chinese waste import restrictions. The paper and board recycling rate in Europe increased to 72.3 per cent, while at the same time there was a 1.4 per cent increase in the use of recycled paper in the industry.

New trailers for Saica Paper

Following a recent contract extension with Saica Paper, UK-based CM Downton has invested in 10 new trailers for use on the contract, five of which are painted in the client's new livery design.

The two companies have collaborated since Saica Paper opened its new paper mill at Partington near Manchester in 2012.

These trailers are part of an ongoing joint continuous-improvement programme and have a number of features primarily designed to eliminate water ingress, thus reducing damage to paper reels in transit.

The contract covers the inbound transportation of full loads of recovered paper collected from various UK recycling sources into Saica Paper's paper mill, and the outbound delivery of full loads of paper reels to customers throughout the country. The operation involves around 13,000 inbound loads and 3,000 outbound loads each year, or around 65 loads per day in total.

David Hutchings, head of business development at CM Downton, said: "We have been working closely with Saica Paper for over six years, and have demonstrated strong service levels, resulting in our recent contract extension. Continuous improvement has played a key role in this partnership, and this is a great example of how we are able to provide innovative solutions to enhance the client's service levels and profitability."

Now owned by EmergeVest, CM Downton is a market-leading transport and logistics operator with an objective of combining the values of a family business with the capacity and scale of a major multi-national service provider.

Customers include some of the UK's largest companies from a range of sectors including print and publishing, food and drink, retail, manufacturing, ink and paper, energy, waste and consumer goods. The business employs approximately 1,350 people at 16 distribution hubs strategically located throughout the UK. The business operates 600 tractor units and 1,800 trailers.

MTO accreditation opens growth opportunity for Dimerco

Taiwan-based logistics specialist Dimerco has been awarded Multimodal Transport Operator (MTO) status in India, opening up new opportunities for growth for the company in the subcontinent.

Although well-established in India, with a network of six owned offices and 12 partner offices, the MTO license will enable Dimerco to provide extended services to shippers, moving cargo from any land point in India to and from any destination in the world, under a single Contract of Carriage.

Under the terms of India's Multimodal Transportation Act, only those companies who are registered by the Director General of Shipping can carry out Multimodal Transportation, to protect the interests of shippers. Dimerco's MTO accreditation demonstrates that it has the necessary expertise, infrastructure and financial status to undertake such Multimodal Transportation.

According to Edward Lin, chief executive of Dimerco, the achievement of MTO status will benefit both customers and partner carriers.

"The manufacturing hubs in India, which contribute a major share of exports, are located deep in the hinterland and far away from the gateway ports," said Lin. "Therefore, the potential for multimodal transportation – including long and short hauls – is immense. As a Multimodal Transport Operator, Dimerco can now take responsibility for transporting cargo from one point to another, utilising more than one mode of transport, ensuring more efficient and cost-effective door to-door movement of goods for our customers.

"We can also now work better with ocean carriers, since carriers do not handle shipments from offline/inland areas of India, so for Dimerco MTO recognition is key for our business development and carrier relationships in India."

Wet-wipe manufacturing with the environment in mind

The Voith WLM1 line at Dimona

The efficient manufacture of eco-friendly nonwovens from renewable cellulose has been made possible in a collaborative project between Voith and Trützschler Nonwovens. PPL reports

Israel-based Albaad, one of the world's three largest producers of cosmetic wipes, has been banking on two well-established technology leaders in the field of wet-laid nonwovens, Voith and Trützschler Nonwovens, both based in Germany, and their innovative wet-laid/spunlace (WLS) technology.

A new wet-wipe production line has been constructed at Dimona in Israel using the technology to produce wet-laid and hydro-entangled nonwovens from 100 per cent cellulose.

Now in the first phase after start-up, the WLM1 line has reportedly met Albaad's expectations: the nonwovens manufactured at a speed of over 200 metres per minute are said to have exhibited an extremely high product quality.

Gadi Choresh, plant manager of Albaad in Dimona, says he is satisfied with the work carried out by Voith and Trützschler: "The installation and start-up of the machine went very well. With their professionalism and high level of commitment, the team has ensured the success of the project. Albaad appreciates the long term commitment and support to achieve the line properties even when things were not as expected."

Voith and Trützschler machines for optimum quality

For the wet-in-wet production of its nonwoven products, Albaad exclusively uses fibres made from cellulose. In the first step, web formation, a suspension highly-diluted with water is produced and fed into the Voith HydroFormer. A homogeneous fibre mat forms on the inclined wire of the machine. In many respects, this process is similar to the manufacturing process of paper. Voith has carried its extensive competence in paper machines over into the HydroFormer concept and thereby makes it possible to produce high-quality nonwovens in this segment as well.

Trützschler was largely responsible for the web bonding and drying machines. AquaJet technology is used in the bonding of nonwovens, a process in which directed high-pressure water jets interweave the individual fibres together by using the momentum of the water. The material thereby obtains a high tensile strength and the desired textile feel without the use of any binding agents or bi-component fibres.

In Albaad's WLS plant, Trützschler's high-performance Streamliner dryer carries out the bulk of the drying of the nonwoven material. The spiral dryer section significantly increases the air speed, achieving optimum drying performance. With the second drying step comes the component of the system provided by Voith, the contactless MCB drying system. Its uniform and stable web run ensures the efficient residual drying of the nonwoven material.

Voith has furthermore equipped the WLM1 line with a comprehensive process and quality control system. It monitors all the relevant parameters of production and reliably ensures a high product quality.

Gadi Choresh, Albaad's plant manager at Dimona in Israel

Simple manufacturing of 100 per cent biodegradable, flushable wipes

The renewable raw material cellulose is very cost-effective and allows the manufacture of high-quality nonwovens with a range of characteristics. One special product segment is flushable wipes, which disintegrate very quickly in moving water but at the same time have a high strength when wet. They are also completely biodegradable.

The hygiene products produced on the WLM1 line are suitable as moist toilet paper and can simply be flushed down the toilet. They therefore make an important contribution to reducing blockages and faults in waste-water systems. Cellulose-based hygiene products are also considerably more environmentally-friendly than those made from oil-based raw materials and help to ensure that our seas become less polluted with plastic waste.

The second raw material needed for production, water, is also used in an environmentally-compatible manner through the wet-in-wet technology. In a circuit, a filter system treats the white water from the HydroFormer and AquaJet and returns it to the manufacturing process.

Trützschler and Voith at a glance:

Trützschler is one of the world's leading manufacturers of textile machines. With a history going back 125 years, its headquarters are in Mönchengladbach, Germany, and it has other facilities in Germany, Switzerland, India,

Trützschler's AquaJet for web bonding on the WLM1 line

Voith's HydroFormer on the WLM1 at Dimona

China, Brazil, and the USA.

Trützschler Nonwovens is a division of Trützschler Nonwovens & Man-Made Fibers and was created after the acquisition and amalgamation of Fleissner, Erko/Hergeth and Bastian. It offers systems for the entire nonwoven process chain, from fibre preparation, web formation, bonding and finishing to reeling up.

Voith Paper is a division of the global technology group Voith. With Papermaking 4.0, paper manufacturers can interconnect their equipment through the effective and secure use of generated data. With Servolution, Voith Paper offers its customers tailored service solutions for all sections of the production process.

More information from:

Voith GmbH & Co. KGaA, Vvkemea, St Pöltener Straße 43, 89522 Heidenheim, Germany. Tel: 49 7321 37 2487. Website: www.voith.com

Trützschler GmbH & Co. KG, Textilmaschinenfabrik, PO Box Postfach 41 01 64, Duvenstraße 82-92, D-41199 Mönchengladbach, Germany. Tel.: 49 2166 607-0. Website: www.truetzschler.de

Durable and reliable performance from optimised dryer fabrics

New products to ensure that dryer fabrics remain durable and reliable, even under challenging conditions, have been developed by Valmet. These provide more economical solutions that match customers' precise needs. PPL reports

Durable and reliable dryer fabrics ensure that the paper-making process is predictable and minimises the need for unplanned fabric changes.

"Our customers appreciate easy tail threading, good runnability, long life and low fabric cost – regardless of their machine or the paper grade. The high quality of our dryer fabrics comes from our expertise dating back over half a century, and the millions of square metres of fabrics produced," says Juha Paavolainen, Valmet's product technology manager.

The largest product group in Valmet's portfolio of dryer fabrics is the double-warp polyester (PET) fabrics, named after the product name renewal called Valmet Dryer Fabric OR, OP and EOS.

Optimised for different operating conditions

Factors limiting the running time of dryer fabrics include hydrolysis, contamination, wear and damage.

"Our PPS-reinforced dryer fabrics are excellent for hydrolysis-prone positions," says Paavolainen.

"However, contamination and mechanical wear are sometimes even more crucial for the dryer fabric's running time than hydrolysis, and for those challenges, we have developed a totally new material: MHR. It can withstand hydrolysis to a sufficient degree, but it measures notably higher in seam strength and loop elasticity than PPS.

"The double-warp structure of our dryer fabrics lets us optimise them for different operating conditions, and our professionals ensure that customers get the best product for their needs. Right now, we're studying even more hydrolysis-resistant yarns to replace expensive PPS material, and it looks very promising," says Paavolainen.

New products developed for recycled furnish

Using recycled furnish with a high sticky content and consequent use of latest high-pressure cleaners has changed the requirements for dryer fabrics. Going forward, Valmet is developing new materials and products aimed at matching these requirements.

"For example, our new Valmet Dryer Fabric DG has a relatively open sheet side surface to prevent dirt bridging in between the yarn knuckles, while the machine side is smooth for good sheet runnability," explains Paavolainen.

"Its unique weave pattern has been designed to improve the high-pressure cleaning effect by arranging weft yarns so that the water jet against the fabrics' running direction is directed through the fabric. Valmet Dryer Fabric DG shares the double-warp structure and durable warp loop seam of other Valmet dryer fabrics to guarantee long life and low fabric cost."

Edge reinforcement for durability under harsh conditions

For a maximum running time and a stable performance of its dryer fabrics, Valmet has developed a new edge reinforcement material: Valmet Edge Seal TR. It has excellent heat, chemical and wear resistance, and its flexibility ensures good performance when the length or tension of the fabric is changed during the run, as well as while the fabric is bending around the rolls.

"Valmet Edge Seal TR consists of specially developed polymers, utilizing extensive laboratory testing to find the optimal properties. The next step, applying the material at the edges, is carried out with our modern equipment, tailor-made tools, and professionals in Finland and in China. We are aiming for nothing less than uniform edge quality with complete adherence and the best performance," says Paavolainen.

To complement the wide range of dryer fabrics, Valmet offers fabric care and maintenance products and services. With a comprehensive range of on-site services, laboratory analysis for used fabrics, fabric guides, stretchers and HP cleaners, Valmet extends fabric lifetimes and makes its dryer fabrics a high-quality but also an economical choice.

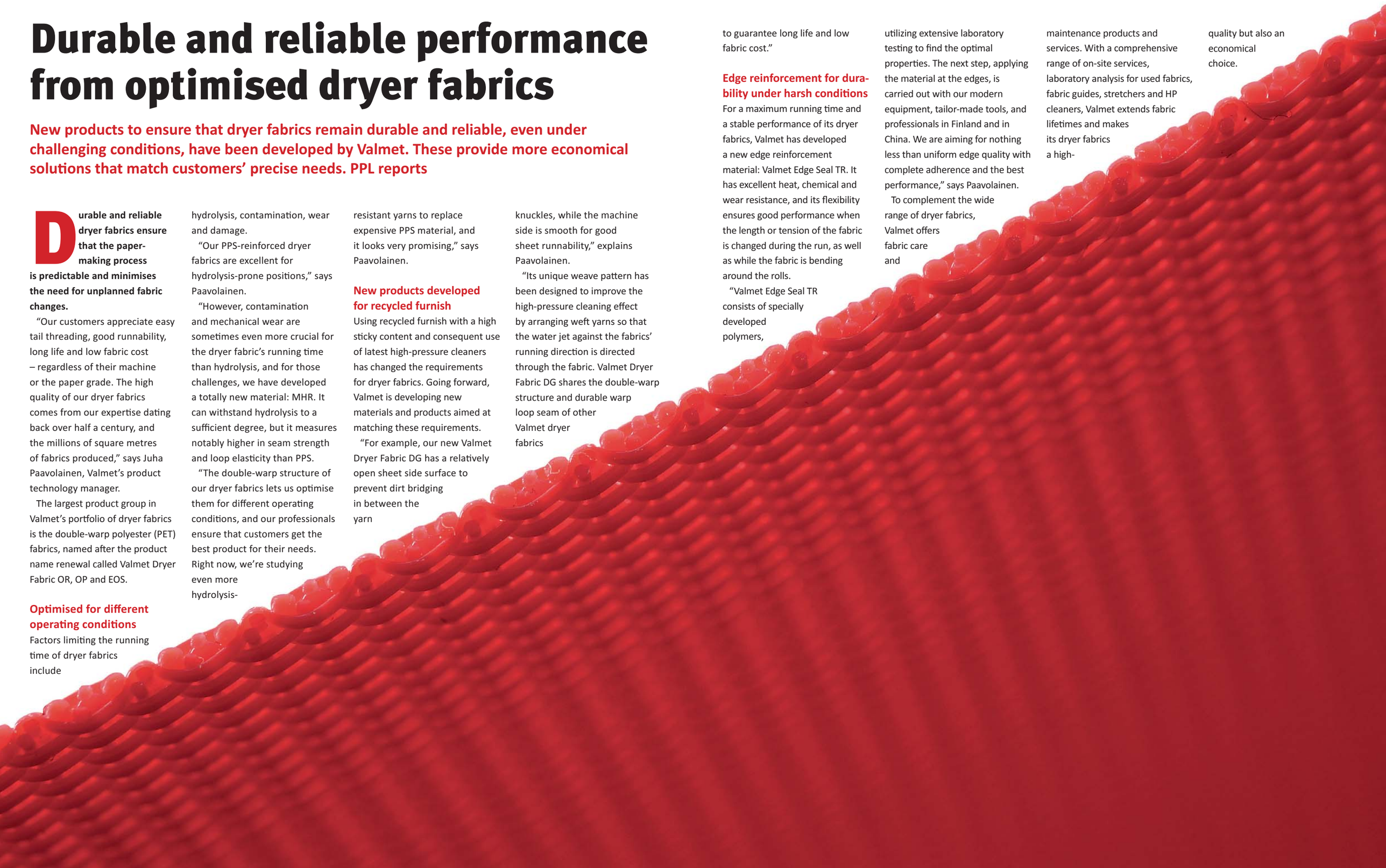

Pulp Paper & Logistics

Saving the planet piece by piece

Waste paper arriving by truck at Sun Paper

Sun Paper's Honghe mill in China needed a tailor-made handling system to process rejects from two OCC production lines feeding its two paper machines. Andritz delivered one system in 2016 which a year later followed by a second. PPL reports

When the Chinese central government makes rules or laws, it enforces them far and wide and with extreme speed and effectiveness. Along with many other environmental restrictions brought in lately regarding industrial emissions and levels of pollution, it also banned the use of landfill, meaning that pulp and paper producers across the country had to look long and hard at production processes. And particularly at the way rejects from recovered paper production are managed.

One of those companies in the middle of all the environmental reforms taking place in China is pulp and paper giant Sun Paper. Not that there is any anxiety or concern surrounding its environmental credentials – the company has always prided itself on being ahead of the game when it comes to environmental performance. But what was becoming a problem was the quality of recovered paper and the amount of contamination that comes along with it.

Guangdong Ying, chief engineer at Sun Paper, says: "We have plenty of customers wanting our product, we are approaching production of around two million tonnes a year of high quality packaging board. But the problem is the quality of the recovered paper, the sorting system in China is not really good yet, and needs improvement. A lot of truck loads come in to our mill with all sorts of contaminants, plastic and metals and even kitchen waste.

"We decided around three years ago that we needed to consider installing a really good reject handling system to help improve the management of the rejects, and then of course in came the landfill regulation as well."

Something new, something better

Sun Paper is one of those hugely successful Chinese pulp and paper enterprises that has seemingly risen from nowhere to become a giant. Founder and president Li Hongxin started selling paper from the back of a motorcycle in 1982 and now heads a company that is in the Top 50 of the world's largest pulp and paper companies with yearly pulp and paper making capacity of 4.5 million metric tons.

Sun Paper prides itself in only installing the very best when it comes to technology across its mills and plants. Ying says, "At Sun Paper, we always like to do something new, something better and, of course, something our competitors are not doing.

"We took a trip to Europe to have a look at Andritz reject line references and were very impressed – Andritz is the obvious leader in this field."

The new line – the only one on China

At Sun Paper's Honghe mill in Shangdong Province, two 'mirror image' testliner machines, PM31 and PM32, were started up in 2016 with total yearly capacity of 800,000 metric tons. Two years earlier, Sun Paper had ordered a reject line from Andritz that would process 200 tons of light rejects per day from both pulping lines feeding the testliner machines. The pulping system for PM32 was delivered by Andritz at the same time, which helped when it came to installation. The reject line was later upgraded to include a heavy-duty Andritz Franssons Shredder FRX2000, which was installed in June 2017.

Chen Fang, sales & marketing director at Andritz's Pulping, Fiber and Recycling Division, says: "The reject line from Andritz is pretty much perfect for what Sun Paper needed for the waste-to-value process and, of course, avoiding any landfill use. The reject system basically sorts and converts the mill waste rejects either into something

Pulp Paper & Logistics

The complete Andritz reject line processes 200 tons of light rejects per day

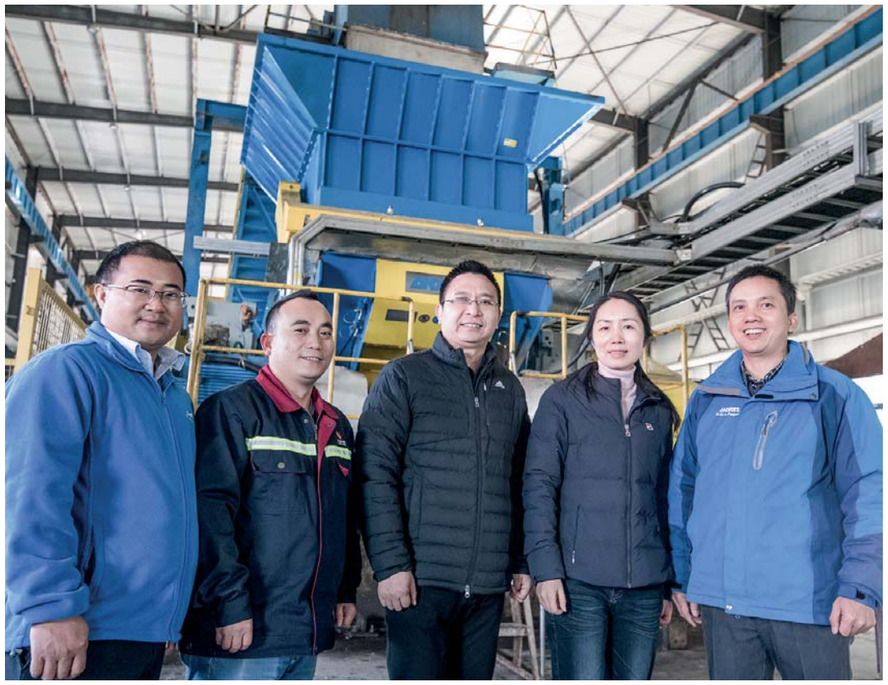

From left to right: Zhu Zhipeng, Andritz Pulping, Fiber and Recycling Division; Lilian Zou, pulping manager, Sun Paper; Guoling Fu, production director, Sun Paper; Chen Fang, sales & marketing director, Andritz Pulping, Fiber and Recycling Division; and Li Feilong, senior project manager, Andritz Pulping, Fiber and Recycling Division

The Andritz Franssons Shredder FRX2000 features CoverCross knife system and pusher technology

"At Sun Paper, we always like to do something new, something better," says Guangdong Ying, chief engineer at Sun Paper

"The Andritz reject line can pretty much separate out anything that comes down the conveyor from the pulpers," says Guoling Fu, production director at Sun Paper

that can be sold – for example, metals – or into waste that can be burnt in the boiler, therefore creating energy."

The scope of supply at Sun Paper included coarse and fine shredding systems, a ballistic separator, reject compactors, sand separators, as well as coarse and fine metal separators including ferrous and non-ferrous metal separation.

No more landfill

"The initial start-up went according to plan," says Li Feilong, senior project manager at Andritz's Pulping, Fiber and Recycling Division, "although it must be said the reject line was a bit of a steep learning curve as this was a first for the Andritz team in China, as well as for Sun Paper.

"However, from the system coming in to running was just one week and from commissioning to start-up was just 24 hours!" The later addition of the Andritz Fransson shredder helped to increase the capacity of the line with its innovative CoverCross knife system and pusher technology.

"The Andritz reject line can pretty much separate out anything that comes down the conveyor from the pulpers," says Guoling Fu, Sun Paper's production director. "The line at Sun Paper can dewater, fractionate, shred, and separate waste paper contaminants such as plastic films, textile scraps, tying wires, and pulper rags.

"Ultimately, this means that we can separate the impurities either for burning in the boiler or selling for scrap as in the case of metals. Most importantly for us, it means nothing goes to landfill."

Needless to say, Sun Paper is very happy with the new reject line and has ordered a second one, which will be starting up later this year.

Ying concludes: "We only have one Earth; it's our common home and we must keep it clean!"

After the visit to Sun Paper, in Beijing the sky was blue and the air was clear and the Chinese newspapers were declaring that the government's war on pollution was reaping rewards. Clearly, the massive operation being undertaken by the Chinese government, along with companies like Sun Paper using top technology to reduce environmental impact, is beginning to pay dividends, piece by piece and reject by reject.

Beating chromium in Yankee metallizing

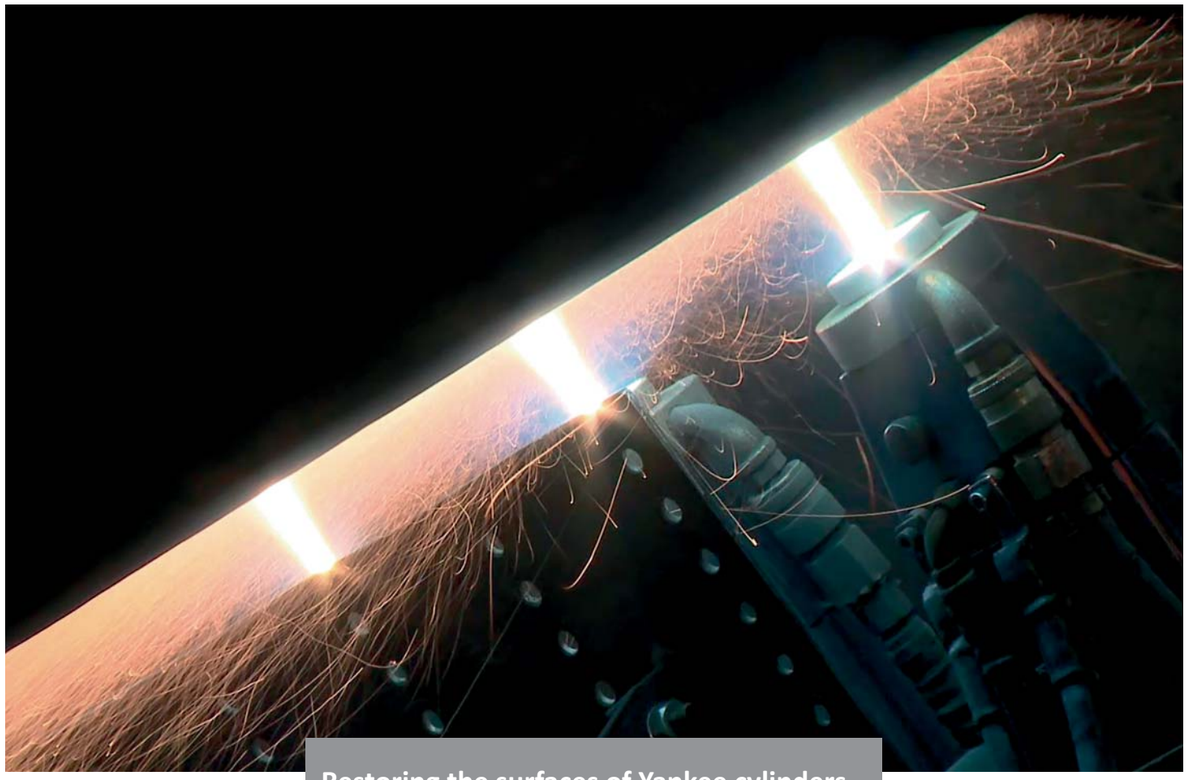

Restoring the surfaces of Yankee cylinders is a vital service for the tissue making industry. Valmet has developed a new process that meets modern environmental requirements. PPL reports

Damaged Yankee cylinders in tissue-making machines impede production and can have a detrimental impact on tissue quality. Cylinders with damaged surfaces are often metallized, particularly if the remaining cylinder shell is not thick enough or if further grinding may affect performance.

A recognised risk with metallizing is that during the process, potentially-harmful hexavalent chromium (chromium-6) is created. Chromium is a fundamental component of almost every iron-based hard-facing alloy.

It is a process that originated with UK-based Bender Machine Services, which in 2004 agreed with Metso to provide a worldwide service programme for Yankee and MG cylinder grinding and thermal spraying.

Valmet – which had been providing the market-leading Infinikote Yankee Metallizing service for more than 20 years – recognised the potential risks associated with the thermal spraying of ferrous materials containing chromium. Three years ago Valmet embarked on a programme to develop new alloys that were better than chrome in the Yankee metallizing process.

The new Infinikote-2 Yankee Metallizing process uses alloys that contain no chromium and generates no hexavalent chromium during application. Valmet says it is the most environmentally-safe and durable Yankee metallizing coating available.

For the safety of people and the environment

Yankee metallizing is part of Valmet's on-site field service and is carried out on the customer's premises. The process involves grinding the surface of the Yankee and restoring it with a hard-wearing finish, and takes up to four days.

"We identified the need to change the system to better ensure safety for customers and our employees, and to anticipate future environmental legislation. This led to the decision to invest in the development of new, safer materials for Yankee thermal spray coatings," says Marko Heino, director of field services at Valmet.

A collaborative development team from Valmet's hard-coatings research and development group at Jyväskylä in Finland joined with Valmet's partners to create a team of world-class material scientists, metallurgists and manufacturing supply-chain partners.

The same performance, but without chrome

The plan was to create a new generation of Yankee cylinder metallizing alloys, which had to display quality attributes at least as good as those for Valmet's current Yankee metallizing process, but must contain no chromium-bearing constituents. Valmet Infinikote-2 Yankee Metallizing should equal or surpass the competition in all measured criteria for Yankee thermal-spray coating performance.

The main goals were stable creping surfaces while still addressing environmental and safety concerns, with the same application process and a wider application window.

Key structural and surface characteristics for optimum Yankee performance were reevaluated to ensure fundamental improvements in all crucial areas: wear and corrosion resistance, heat transfer, and surface tension.

"Groundbreaking collaborative development procedures enabled us to quickly design new alloy materials, optimise microstructures, and achieve our target performance metrics," says Andrew Cross, senior operations manager at Valmet's Global Yankee Services based in the UK. "This wasn't to meet any legislative requirement to eliminate hexavalent chromium, but it was good for the sustainability of the process. Valmet is the only company in the paper industry to offer it."

Intensive development and exhaustive trials led to the identification of candidate materials best suited to the objectives. From these, the final formulation for the new chromium-free thermal spray material was created.

"The test results with the new material are convincing, demonstrating significantly improved application characteristics, and meeting or exceeding all our key objectives," says Cross.

Infinikote-2 Yankee Metallizing results:

- 100 per cent chromium free
- Dramatic reduction in dust production and fumes
- Lower coating contamination
- Superior coating structure
- Greater adhesive and cohesive strength
- Improved hardness

Valmet Field Services provides services at customers' sites. Yankee thermal spraying is an example of delivering field services, where safety, communication, and trust are the top priorities.

Valmet Infinikote Yankee Metallizing has been the market-leading Yankee cylinder thermal spray coating system for more than 20 years. Its strengths are hardness, durability and heat transfer. Infinikote Yankee Metallizing is not just a 'coating' but a patented material and application process. It provides superior tissue creping surfaces, and maintains the Yankee cylinder profile for longer, without the need for regular maintenance.

New metallizing material produces less dust and fumes and no hexavalent chromium

Going vertical

Removing the limitations in lower feed consistency while retaining the strengths of a screw press were behind the latest innovation in dewatering. Peter Ortner reports

Every item of production equipment in a paper mill has a range in which it performs extremely well, and also mechanical limitations where performance is less than optimum. Building on technical strengths and overcoming limitations are what has motivated Andritz's engineers to innovate new designs – such as the VST.

With more than 500 units in operation, the Andritz Screw Press (SCP) is regarded as being top of the line. But, even a premiere product has practical limits. In the case of the SCP, the limitation could be observed in applications with lower feed consistencies (e.g. 3-6 per cent).

"How can we remove the limitations in lower feed consistency applications – while keeping the inherent design strengths of the SCP?" That was the question that Andritz engineers answered when developing the developing the VST.

The idea behind the development of the VST

Simply described, the VST is a vertical configuration of the SCP, with some important differences. In an SCP, the pulp suspension is fed into the inlet housing of the unit and dewatered using a rotating screw that tapers to increase the dewatering effect on the pulp. Feed consistencies are typically in the range of 5-10 per cent. The dewatered pulp is discharged by gravity from the outlet casing at the end of the rotating screw. Typically, outlet consistencies in the range of 26-30 per cent are achieved.

The horizontal design has two main limitations: firstly, at low feed consistencies (3-5 per cent) the holes of the screen baskets in the inlet zone tend to plug; and secondly, there tends to be uneven filling of the press across the complete area of the dewatering screen. These two limitations reduce the throughput and discharge dryness of the pulp. The VST was designed to overcome these limitations in specific applications.

The impact of hydrostatic pressure

The SCP is fed from the top through the headbox into the first dewatering section. Due to the height difference between the top and bottom of the dewatering screen, hydrostatic pressure builds up in proportion to the diameter of the press (see Figure 1). For large screw presses, this hydrostatic pressure can reach between 0.10 and 0.15 bar.

VST in the Andritz pilot plant in Austria

This pressure creates uneven filtrate flows around the screen circumference. There is lower filtrate flow at the top of the press where the hydrostatic pressure is low and a higher flow at the bottom of the screen basket where the hydrostatic pressure is highest.

This pressure profile is consistent over the length of the dewatering screw. Particularly in applications with low feed consistencies, the hydrostatic pressure can already be too high at the beginning of the dewatering process. The speed of the filtrate flow through the screen basket is at such a level that fibres can be dragged into the holes and build up a layer on the surface of the screen – reducing dewatering efficiency.

Another limitation of a horizontal design is the difficulty in obtaining uniform filling, and thus uniform dewatering, through the three dewatering zones (low-, medium- and high-pressure) and over the full length of the screw. An uneven filling degree means that the available screen area is not fully utilised and that no dewatering force is applied to some of the pulp suspension and the dewatering efficiency is reduced. When observing an SCP during operation, areas along the screw shaft with good dewatering (where a lot of filtrate is squeezed out) and areas where less dewatering takes place are visible.

Taking it vertical

Often, the simplest ideas are the best. After evaluating several different design concepts to address these two limitations of the SCP in low feed consistency applications, the solution turned out to be a quite simple one: turn a horizontal SCP on its end and feed it from the top. In a vertical configuration, gravity works in a positive way: evenly distributing the pulp suspension across the full circumference of the dewatering screen and ensuring 100 per cent filling.

In a VST, the pulp suspension is fed into the top of the machine and gravity transports the pulp downwards. The risk of plugging the inlet screen at low feed consistency applications is almost eliminated. Similar to the SCP, the VST has a conical shaft and decreasing pitch so the pulp is compressed and dewatered as it moves downward. The pulp suspension is automatically and consistently refilled into the area between screw flights. The rotating shaft moves the pressed cake downwards to the outlet casing.

A pneumatically-controlled counter-pressure ring builds up the pulp plug quickly after startup and releases the pulp when the proper consistency is achieved. The ring pressure can be adjusted to fine-tune discharge dryness or can be quickly unloaded to avoid plugging. The result is that higher throughput can be achieved with the VST.

The importance of 100 percent filling

The VST utilises gravity to achieve 100 per cent filling degree (100 per cent of the screen area is used for dewatering). From top to bottom the filtrate flow

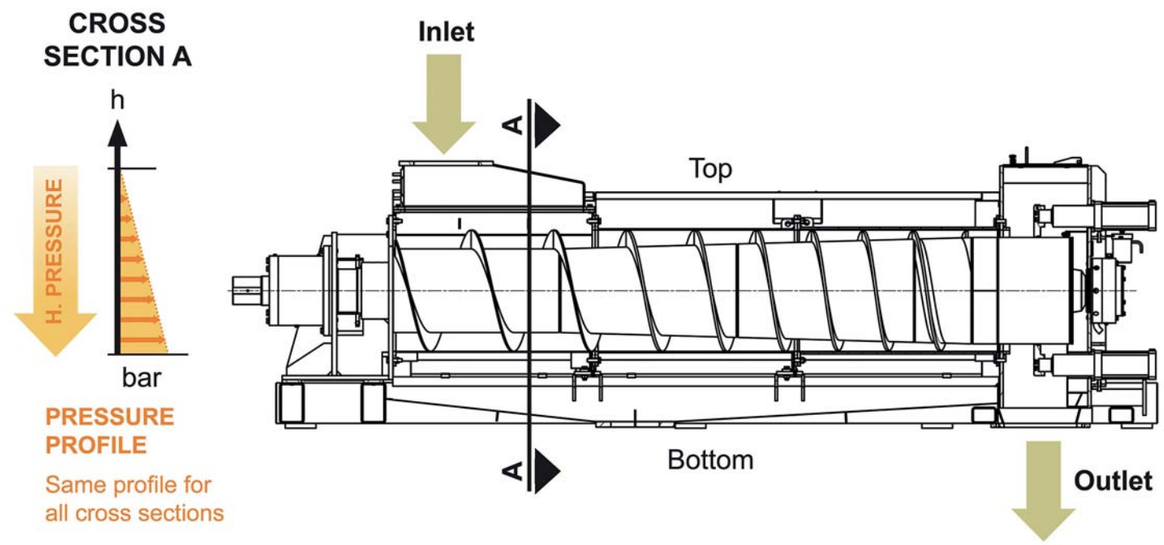

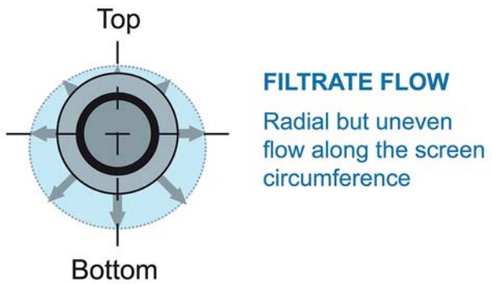

Figure 1: Dewatering physics of the Screw Press (SCP)

around the complete screen circumference is highly uniform (see Figure 2).

Similar to the horizontal press, hydrostatic pressure increases from top to bottom of the vertical unit. Unlike the horizontal design, the increased hydrostatic pressure actually improves the dewatering effect, since higher pressure is required as the pulp suspension's consistency increases down the length of the screw. The hydrostatic pressure is enhanced by the design of the screw shaft with lower volume at the end. This creates additional dewatering forces and results in extremely uniform dewatering around the complete circumference of the screen baskets over the complete length of the machine.

Elimination of bending forces

For screw presses, it is important to maintain a very small gap between the screw flights and the screen baskets in order to achieve high dewatering efficiency. Mechanically speaking, the 'dead weight' of the screw shaft itself plus uneven dewatering forces on the shaft of a horizontal SCP create bending forces and possibly deflection of the shaft.

Mechanical designers make every effort to reduce the deflection to a minimum; however, the deflection can be significant for longer screw presses (up to 10-metre shaft lengths). This deflection makes it difficult to maintain a small and uniform gap between the screw flights and screen baskets over the length of the shaft.

In the vertical configuration, the dead weight of the screw shaft has no impact and the screw operates with symmetrical axial forces. The opportunity for deflection is minimised and a uniform gap can be maintained over the length of the screw.

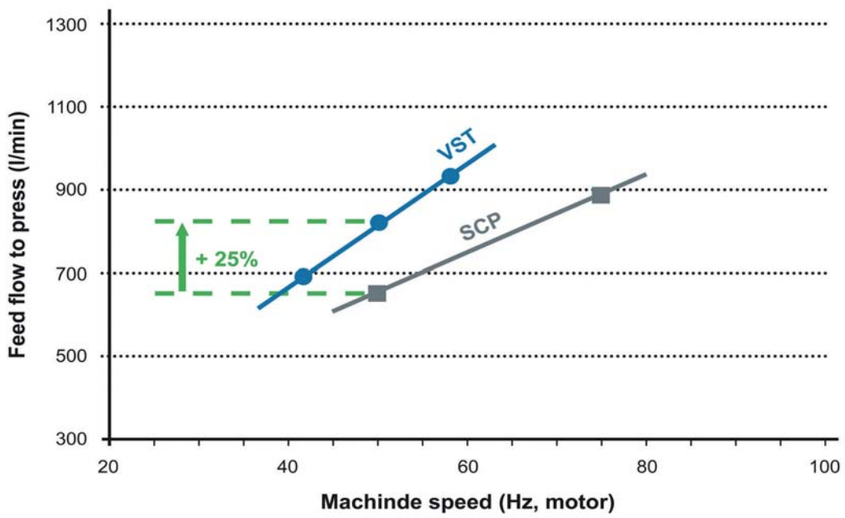

Figure 3: Increased throughput with hardwood kraft pulp (VST compared to SCP)

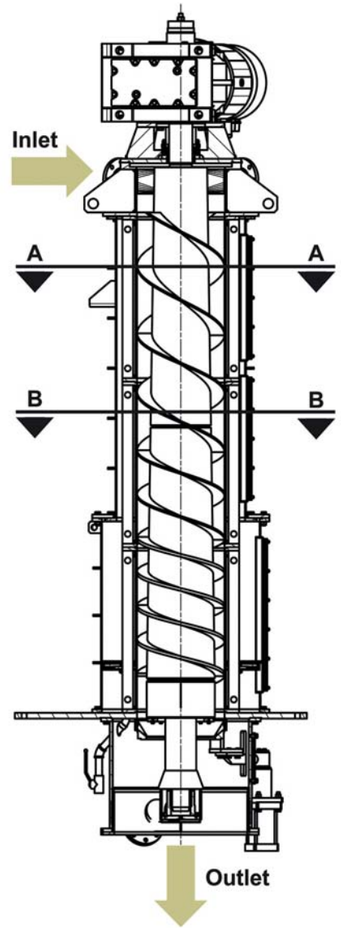

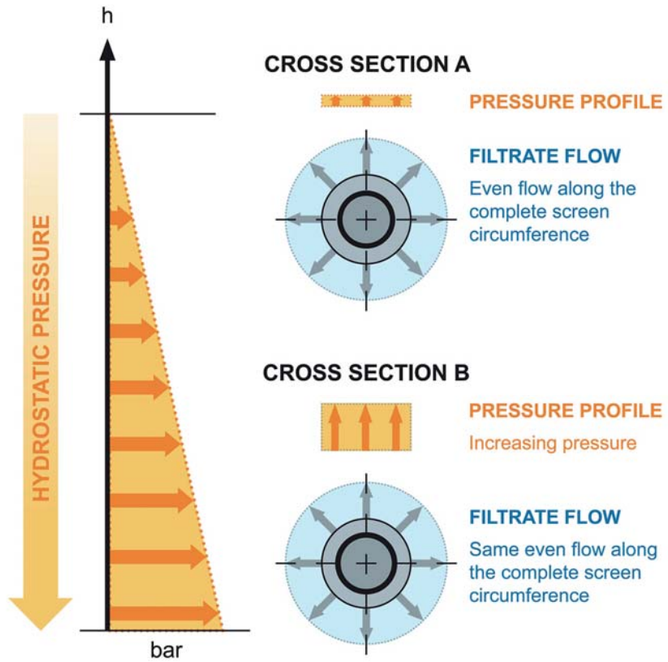

Figure 2: VST cross section and enhancement of hydrostatic pressure

Applicable to all kinds of pulp

In 2015, a pilot VST was installed at the Andritz plant in Austria. The pilot machine was actually the smallest industrial size of the VST available, so that scale-up could be more readily evaluated.

Various types of pulp have been tested in the pilot plant. The conclusion is that there are no limitations on the kinds of pulp that can be dewatered with the VST under various operating conditions. Table 1 shows the range of pulp properties and operating conditions that can be successfully dewatered.

In a trial on hardwood chemical pulp, the VST was compared side-by-side with a traditional Andritz Screw Press. Figure 3 shows the comparative results. At low feed consistency the VST demonstrated a 25 per cent increase in throughput at the same outlet consistency over the whole range of operating speeds.

Similar results have been achieved with other types of pulp, including recycled deinked and OCC.

Pilot trials have also shown lower energy demand for the VST, which would enable a reduction in the size of the motor and gearbox. The VST design is completely closed. It is designed with unique telescoping bottom filtrate housing and split screen baskets for easy maintenance. The screw shaft also has replaceable wear shoes to enable high efficiency over a long lifetime.

More information from Peter Ortner at peter.ortner@andritz.com

Pulp type	Kraft pulp (hardwood and soft-wood), OCC, deinked pulp, TMP, B(C)TMP, semi-chemical pulp
Freeness	120–750 ml CSF
Feed consistency	3–10%
Outlet consistency	25–35%
Temperature	30–95°C
pH	4–10

Table 1: Types of pulp that can be dewatered with the VST

Main benefits of the VST:

- Higher production – or higher output dryness at the same production – when compared with a traditional SCP of the same size
- Highest dewatering efficiency (particularly for low feed consistencies)
- 100 per cent filling degree - screen baskets fully utilized to increase dryness and throughput
- Gravity-aided filling – uniform dewatering from top to bottom
- Uniform and consistent pulp discharge, which is beneficial to downstream processes
- Small space requirement/ footprint
- Closed machine design
- Telescoping filtrate housing for easy maintenance access to screw and screens in the high-pressure zone.

Low profile skidding system simplifies Yankee change

A tissue maker in Canada has used a novel approach to removing and replacing a 55-ton Yankee dryer on one of its lines.

Irving Tissue's mill at New Brunswick needed to change the Yankee, 3.78 metres in diameter and 4.06 metres long and with protruding shafts, but it was deeply embedded on the second floor the building, making access difficult.

The mill contracted an affiliated heavy lifting and specialised rigging business, Irving Equipment, which used a low profile hydraulic skidding system for the job.

Operations manager at Irving Equipment Ryan Long explained that the scope of work presented four challenges: the travel route, second floor location of the dryer, floor strength, and tight confines for blocking up the loads.

In addition to the 350-ton capacity LP350 Hydra-Slide low profile hydraulic skidding system, Irving employed an Enerpac EVO power pack system and four 50-ton capacity jacks for vertical jacking of the dryer; a pair of 8-ton capacity Broderson carry decks for material handling; and a 250-ton capacity Liebherr LTM1200 all-terrain crane, used to hoist the Yankee off the second-floor temporary mezzanine that the dryer was slid out onto.

Long outlined those challenges in greater detail. Since the dryer was a primary component of an existing in-line paper machine, he said, it was deeply embedded within the plant and required the project team to make three directional changes and three elevation changes to avoid existing infrastructure.

"As the dryer was on the second floor of the plant, in order to get it to ground level a temporary mezzanine was designed and installed outside of the plant at the same elevation as the sliding system, and the back wall of the plant was removed. This allowed us to slide the dryer completely outside of the building and onto the mezzanine before lifting it off with our Liebherr LTM1200."

With the concrete floor unable to support the weight of the dryer a steel grillage system was installed to bridge the floor between supporting columns. Since the dryer removal was part of a larger overall shutdown, the system had to be installed in a sequence that didn't impede that scope of work.

"Combined with the awkward 1.7 metres of space, we knew it would be time-consuming and hard on the rigging crew to do all of that work while hunched over," Long said. "It screamed soft tissue injury! To overcome this, one of our team members [Mike Neill] hatched the idea for a very clever ratcheting jack-post design that eliminated the need for blocking."

The LP350 eliminated the need to remove a roof section and lift out the dryer with a 500-ton crawler crane, which would have added significant costs. The Hydra-Slide system was compact and easy to use within the tight confines of the plant.

The slides took place across two 12-hour shifts. Long stressed the importance of training to successful implementation of the LP350: "Training is critical to our success; without it we would be doing a disservice to our employees and clients. Part of the reason we invested in the [LP350] system was the confidence we got from meeting with the Hydra-Slide team. The fact that they are personally invested in the quality of their products and clearly have a passion for what they do is very important. We knew that they would provide the level of customer support that would ensure our success."

More sophisticated imaging for paper web monitoring

A web monitoring system has been launched by ABB that incorporates a new generation of imaging hardware and software. This is said to provide real-time web monitoring and analytics which enable the quick identification of product deviations that can result in sheet breaks and lost production.

With ABB Ability, a paper making line is said to be able to run efficiently at its highest speed while maintaining the highest quality.

With accurate web defect detection, imaging and identification all playing critical roles in process improvement, the QMS Web Monitoring System's level of integration with the QMS Web Imaging System enables the diagnosis and prevention of web breaks and improved sheet stability.

ABB Ability Web Monitoring System includes a new generation of high-speed cameras that deliver the required high resolution and sharp images. This is complemented by high speed video processing and synchronisation, proprietary analytics, and operator interface features to reduce disruptive events and analyse process behaviour.

Russian e-commerce market targeted by Mondi

A cartonboard e-commerce package design that enables consumers to more easily reseal and return items has been developed by Mondi.

Re(use) is a one-piece shipping package featuring a double hot-melt application. The first hot-melt strip is used during fulfilment to tightly seal the package for dispatch, making additional plastic foil wrapping or bagging obsolete. The convenient tear-open strip – located between the two hot-melt strips – gives consumers easy access to their products upon receipt. If the product is not to their liking, the consumer can use the second hot-melt strip to quickly reseal the packaging and return it.

Re(use) was first launched at the RosUpack show in Russia, where the e-commerce market is expected to reach almost US$22 billion by 2020.

Mariusz Sobieraj, managing director of Mondi Lebedyan commented: "This smart, yet simple, solution meets the growing demand of Russian customers for user-friendly packaging. Our easy-to-use, light and sustainable packaging solution helps brands stay competitive on the e-commerce market and boost brand loyalty."

The packaging solution for e-commerce was developed for the German and Polish e-commerce market for clothing, shoes and accessories. To accommodate similar requests in the near future, Mondi's site in Lebedyan, Russia, was recently equipped with a brand-new folder gluer, and is soon to be expanded by a hotmelt and tear tape unit.

Next generation rheology meter for coatings

A 'next generation' rheology meter for evaluating the viscosity of coatings used on paper and board packaging has been launched by ACA Systems.

The AX100 is said to be capable of measuring the viscosity simultaneously from low to the ultra-high shear region.

Coatings or water-based barrier dispersions are rheologically complex materials, and their viscosity is highly dependent on shear rate. Modern high-speed coaters generate shear rates of more than 1,000,000 1/s, during which the hydrodynamic forces are dominant and the viscosity in that region is a reliable indicator of coating runnability.

Until now, low-shear rheograms have been commonly used in the industry to assess the runnability of coatings, yet there are several experiments that demonstrate that due to lack of hydrodynamics, the low shear viscosity results can be extremely misleading when it comes to the prediction of coating performance on high speed metered size press, rod, blade and curtain coaters. This has created a need for instrumentation that is more specialised in ultra-high shear region to better understand the rheological properties under true coating conditions. Being able to introduce the real conditions into a lab instrument reduces significantly the development costs and time to market as trial and error mill scale trials can be avoided.

The AX100 is a stand-alone system consisting of an automatic movable cylinder that is released at pressure of 100 bar. Samples (50-350 ml) contained in the cylinder are forced through a small capillary and depending on the flow rate the viscosity can be calculated as a function of shear rate. Results are shown in graphical curves or single numbers describing selected shear rate area. For data analyzing the AX100 is equipped with USB and wireless capabilities to quickly transfer data into a cloud services or mill wide systems.

ACA's chief executive Vesa Kukkamo says: "The new uses-friendly analyzer makes the coating development and quality control easier than ever. Due to ultra-high shear rates provided by the analyzer, the rheology of the coating colour can be studied in the real process conditions, having a very good correlation to actual coating runnability. This is extremely important for example in sustainable water based barrier coatings that are typically very challenging in terms of runnability."

More information from ACA Systems OY, Outilantie 3, 83750 Sotkuma, Finland. Tel: 358 40 648 5558. Website: www.aca.fi

New pulp drying plant record set at UPM's Kymi mill

The new pulp drying plant installed at UPM's Kymi mill in Kouvola, Finland, achieved a record production of 2,452 tons per day on 31 May.

It's the latest record to be set by the plant, installed by Andritz in 2015, and is the equivalent of a drying capacity of 389.2 tons per day on the 6.3-metre wide sheet drying machine. It is said to be a new world record for drying of bleached birch and pine kraft.

The high-capacity pulp drying line enables switches between birch and pine pulp production within less than 23 minutes and is capable of handling a wide production range of 1,550 to 2,452 tons per day.

Andritz says that its high-capacity drying lines offer: the highest operational reliability for any pulp grade thanks to proven pulp; drying technology, including the Andritz Twin Wire Former and shoe press equipment; maximum production flexibility and adaptability for large production windows and short grade changing times; and stable operation and low maintenance due to the high degree of automation.

UPM Kymi is said to be one of the world's most efficient producers of softwood and birch pulp and is recognised worldwide for its high-quality products and excellent customer service, which makes the company a benchmark producer in Europe.

Second mill for Rollpap in Czech Republic

Czech toilet and sanitary tissue maker Rollpap is planning to build a second mill, at Opatovice nad Labem in Pardubice.

The Doksy-based paper maker expects the new mill to have capacity for up to 600 tonnes of tissue a month when it starts up at the end of 2019.

The location of the new mill was chosen because it can use energy from the nearby Opatovice Power Station. It is also expecting to use locally recycled paper. Rollpap has been considering replacing imported raw materials for two years.

"It is paradoxical that the waste paper is exported to the neighbouring countries, and thus the transport infrastructure of the Czech Republic is seriously burdened and damaged," company representative Ivana Hotová told local news outlet ctidoma.cz.

Rollpap employs about 50 staff, and its annual sales are about 125 million crowns (US$5.7m).

Propapier PM3 orders wide testliner line from Voith

German paper maker Progroup AG has ordered an XcelLine machine from Voith for its new greenfield-site plant, Propapier PM3 GmbH, at Sandersdorf-Brehna, north west of Leipzig, which is expected to start up in 2020.

The PM3 machine, with a wire width of 10,000mm and an operating speed of 1,600 metres per minute, will have capacity to produce 750,000 tons of testliner and corrugated medium a year. Voith will supply the feeding system, BlueLine stock preparation; reject system, paper machine with hood and process air system, hall ventilation, reel spool transport system and winder. The value of the order was not revealed.

Construction of the Propapier PM3 plant is scheduled to begin early in 2019 with completion expected in the second half of 2020. Together with Progroup's nearby facilities in Burg and Eisenhüttenstadt, the containerboard manufacturer will have a total yearly production capacity of about 1.85 million tons.

Development at Oulu Mill being evaluated by Stora Enso

A feasibility study and an environmental impact assessment (EIA) is being carried out by Stora Enso for a possible multi-million investment at its Oulu Mill on the Baltic coast of Finland.

The feasibility study and the EIA are evaluating the potential for converting the paper mill to packaging board production. The study is expected to be concluded by the end of 2018, and the EIA process is expected to take a minimum of six months.

Currently, Oulu Mill has capacity for 360,000 tons of chemical softwood pulp and two fine paper machines with capacity to make 1.08 million tons of woodfree coated papers. The potential investment would include a new chemi-thermomechanical pulp (CTMP) plant, a brown-based cartonboard line with a capacity of 450,000 tons per year and a kraftliner line with a capacity of 400,000 tons per year.

The conversion of Oulu Mill would, if completed, enable Stora Enso to further improve its position in the growing consumer board and packaging product businesses and take a major step in its transformation.

If the project goes ahead the capital expenditure of about €700 million will be spread from 2019 to 2021. Stora Enso says this would fall within the group's long-term capital expenditure policy of keeping capital expenditure into fixed assets approximately at the level of depreciation. The production on the new lines would start during 2020. Paper production at Oulu Mill will continue at least until early 2020.

Pöyry to provide basic engineering for Finnpulp mill

Finnpulp has signed a basic engineering partnership agreement with Finland's Pöyry Oyj for the €1.4-billion bio-production mill – expected to be the world's largest using softwood pulp – planned for construction in Sorsasalo, Kuopio.

The bio-production mill will be the world's first to utilise intelligent processes and artificial intelligence from the start, says Finnpulp. The basic engineering will take into account the requirements of optimisation in the digital ecosystem from raw material, supply chain and back office to the quality and quantity of production.

Pöyry Oyj's basic engineering includes preparation of the construction stage of the mill's processes, technologies and mill site layouts. This phase, which has now been started, will last to the first quarter of 2019, after which Finnpulp will have binding offers of bio-production mill's main machinery, which enables the final construction decision to be made.

The annual pulp production capacity of the bio-production mill will be 1.2 million tons. It will also produce 60,000 tons of tall oil and one terawatt-hour (TWh) bioelectricity to the domestic power grid. The mill will use 6.7 million cubic metres of raw wood per year.

Sustainable energy initiatives at Nettingsdorf mill

Smurfit Kappa is having a recovery boiler and a pre-evaporation plant installed by Andritz at its Nettingsdorf kraftliner mill in Austria.

The investments are part of Smurfit Kappa's Future Energy Project, which involves the implementation of sustainable energy initiatives at the Nettingsdorf mill. Start-up of the pre-evaporation plant and the new recovery boiler is scheduled for mid-2019 and mid-2020, respectively.

The HERB recovery boiler will have a higher energy output while reducing emissions. Advanced features of the boiler include a smelt spout robot, an advanced soot-blowing control with a hanging parts' weight change indicator, and a process simulator.

To improve energy efficiency at the mill, the new pre-evaporation plant will include Mechanical Vapor Recompression (MVR) technology to increase evaporation capacity at the mill. MVR units operate with very low specific energy consumption and also produce clean condensate that will be reused in other mill processes to minimize consumption of fresh water.

The key component in the press section is a new PrimePress X shoe press with a PrimeSteam VIB steam blow-box for profiling in order to achieve the required dryness. The first dryer group will be rebuilt as a single tier with new PrimeRun Jet and PrimeRun D stabiliser boxes. Ropeless tail threading will be added to the pre-dryer and after-dryer sections. Between the dryer sections, a new PrimeFilm film press will be installed including contactless, high-intensity drying. Furthermore, the after-dryer section will be equipped with a new PM hood and a new dry broke pulper.

At the end of PM2, a complete new re-moisturizing system – PrimeSpray VIB – for both paper sides will be included. Finally, the moisturised paper will be wound using a complete new PrimeReel CenterDrive reeling system.

Reconfiguration for Kruger's pulp mill in Quebec

Kruger's thermo-mechanical pulp peroxide bleach plant at its Trois-Rivières Mill in Canada is to be reconfigured by Andritz.

The Austrian technology group will provide an HC mixer, HC bleach tower discharge system, two MC pumps, a reconditioned pulp screw press, upgrade two existing twin wire presses to achieve a higher production, and change the drive of an existing Andritz twin wire press to the other side.

Andritz will also provide basic engineering, erection supervision, as well as commissioning and start-up assistance.

Kruger says that it decided to place the order with Andritz because of an excellent long-standing business relationship between the two companies, its full process capabilities, and its flexibility to use new as well as used and rebuilt components.

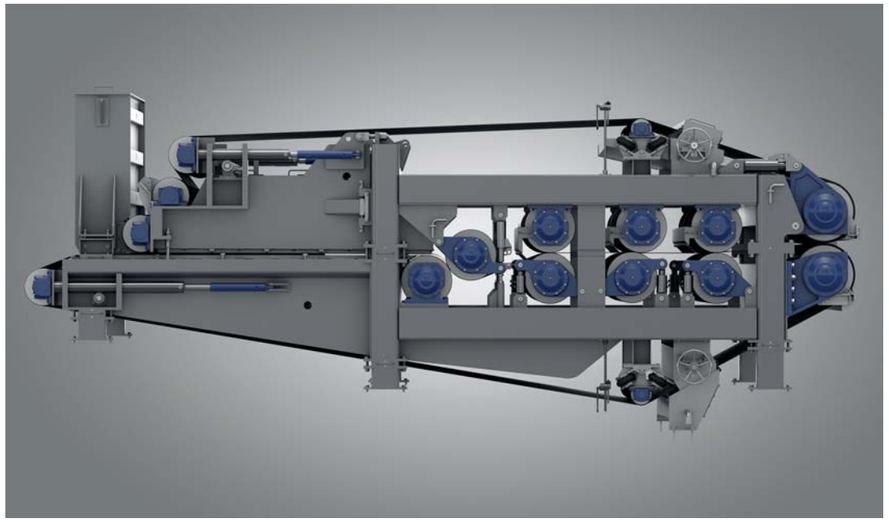

An existing Andritz twin wire press will be converted from an LC to an MC headbox

Repeat board production line order from Pratt Industries in the US

Pratt Paper has ordered an OptiConcept M board production line with automation from Valmet for its new greenfield-site paper mill in the USA.

The mill at Wapakoneta, Ohio, will use 100 per cent recovered paper to produce lightweight and high-performance linerboard and corrugated medium. The start-up of the new board machine, PM17, is scheduled for the fourth quarter of 2019. It will be the second OptiConcept M board production line ordered by Pratt.

Anthony Pratt, global chairman of Pratt Industries, commented: "Start-up of the previous Valmet-supplied OptiConcept M in Valparaiso, Indiana, was exceptional. We have also been able to exceed some of the design features of the machine resulting in very good production figures. Both board machines in Valparaiso and Wapakoneta are showcases for the latest in 21st century paper-making technology."

The OptiConcept M board making line is designed to use less water, electricity and raw materials. "We want to help many companies to meet their sustainability goals without sacrificing their high-performance packaging requirements. That's important not only for our environment but also for our customers who realize the importance of sustainable packaging," said Pratt.

Blue Tissue in Mexico orders complete tissue line

Blue Tissue Sapi de CV in Mexico has ordered a complete tissue plant from A.Celli Paper in a turnkey project for commissioning in the first quarter of 2019.

The new tissue machine will have a pope reel measuring 2,700mm, an operating speed of 2,000 metres per minute and will include an LPG Gas Hood and 16-foot forged steel Yankee.

Blue Tissue specialises in tissue products with high adsorption, softness and quality, supplying the away-from-home hygiene, healthcare and sanitary sectors.

Italy-based A.Celli will also supply a 100 per cent virgin fibre stock preparation system that will work in conjunction with a deinking system (supplied by the customer), as well as a two-plie slitter rewinder.

New PrimeLine tissue machine for Arkhbum in Russia

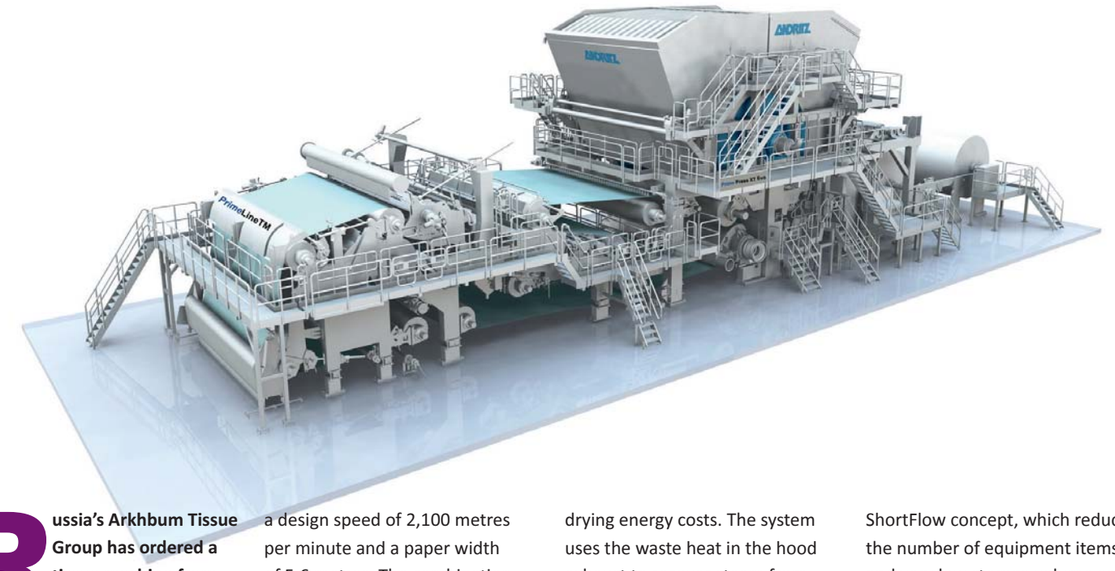

Russia's Arkhbum Tissue Group has ordered a tissue machine from Andritz for its mill at Vorsino in the Kaluga region.

Andritz will supply a PrimeLine W6-XT, including stock preparation, automation, and electrification, for the production of high-quality facial, toilet, napkin, and kitchen towel grades made of 100 per cent virgin pulp. Start-up is scheduled for the third quarter of 2019.

The tissue machine will have a design speed of 2,100 metres per minute and a paper width of 5.6 metres. The combination of a 16-ft steel Yankee and the latest PrimePress XT shoe press technology will enable a high drying capacity. Andritz says it will achieve remarkable cost savings and operational flexibility compared to systems operated with conventional presses and cast Yankee dryers.

The drying section of the machine will be equipped with a ReEvaporation system to reduce drying energy costs. The system uses the waste heat in the hood exhaust to recover steam from the condensate stream, thereby reducing the amount of fresh steam required.

Also included in the order is stock preparation with an approach flow system. This will have a Papillon refiner that treats fibres gently in the cylindrical refining zone to achieve improved fibre properties with low energy consumption. The approach flow system features the Andritz's ShortFlow concept, which reduces the number of equipment items and very low storage volume as well as fast grade/colour changes at the tissue machine. Andritz will also supply process pumps, piping, and instrumentation as well as on-site services.

Irina Galakhova, executive director of Arkhbum Tissue Group, said: "Our new tissue machine will significantly reduce the consumption of water and steam in the production process and also minimize costs in general."

Release paper conversion at UPM's Dörpen mill

UPM Nordland Papier is having a paper machine at its Dörpen mill in Germany rebuilt by Andritz to produce release/glassine papers.

The rebuild of the PM2 machine will increase capacity at the mill to 110,000 tonnes per year when completed as expected towards the end of 2019.

Andritz says the rebuild is complex, with demanding technological requirements for the equipment, process and products quality. In addition, Andritz will also modify the stock preparation system, approach flow and broke system.

The modification of the stock preparation system includes ModuScreen CP police screens for the short- and long-fibre lines and two TwinFlo TF-S34 refiners for the long-fibre line. For the approach flow system, a new Short Flow deaeration silo will be delivered including a vacuum system, new ModuScreen HBE headbox screens for the HC and LC lines, and fan pumps. In addition to these items, a two-stage broke screening system with ModuScreen F, a thickening drum PRS2060, and a deflaker DFL3 are included in the scope of supply. For broke conversion, Andritz will deliver an HC pulper FibreSolve FSH6 and an additional deflaker DFL3.

Every section of the paper machine will be modified. One of the key components is the PrimeFlow SW dilution water headbox. The PrimeForm and PrimeForm HB hybrid formers include new dewatering elements that are considered to provide maximum flexibility for dewatering and also improved sheet formation.

New manager for SCA's Ortviken paper mill

SCA has appointed Magnus Kangas as manager of its Ortviken paper mill at Sundsvall in Sweden.

Kangas, who will start in the new position from the beginning of 2019, was formerly manager of BillerudKorsnäs' paper mill in Gävle, and has held a number of leading positions in the paper industry and the energy sector.

He succeeds Kristina Enander, who becomes president of SCA's pulp business from November.

"With Magnus Kangas, the Ortviken paper mill will get a very experienced leader with broad experience from Sweden and abroad," said Mats Nordlander, president of SCA's paper business.

Ortviken is one of the world's largest magazine paper mills and with 625 employees produces coated and uncoated papers with a yearly capacity of 775,000 tonnes.

Magnus Kangas: new manager for SCA's Ortviken mill

Kristina Enander, SCA's new pulp business president

Richard Coward steps up as president of the CPI

Richard Coward has been appointed president of the UK's Confederation of Paper Industries (CPI).

He is group managing director of Rigid Containers Ltd, and was previously vice president of the CPI succeeding Patrick Willink, who served as president for four years.

On his appointment, Coward said: "The UK's Paper-based Industries are a continuing success story, providing employment throughout the country and producing a wide range of innovative and much-loved products that are inherently sustainable.

"I foresee both opportunities and challenges ahead, and I look forward to helping CPI grow its influence and increase its public profile as it works for the common good of an industry with a turnover of £11.5 billion."

Richard Coward, new president of the UK's CPI

Developing the packaging business in Mexico and Latin America

Tony Colquitt has been appointed as director of business development, Latin America, at BW Packaging Systems.

BW Packaging Systems represents a number of Barry-Wehmiller companies: Accraply, BW Flexible Systems, BW Integrated Systems, Pneumatic Scale Angelus and Synerlink.

"Latin America and Mexico have long been areas of importance for our companies," said Carol O'Neill, president for packaging at the Barry-Wehmiller Group. "With this new role, we want to show our customers that we will continue to serve them and are committed to their growth. We also want potential new customers to know we are actively working to earn their business and will give them the local attention they deserve."

With sales of more than $700 million and 3,000 employees in nine countries, BW Packaging Systems serves customers who can leverage the combined primary packaging, labeling and end-of-line packaging systems of each of the group's packaging companies.

Colquitt started with Barry-Wehmiller in 2016 as sales director for the Latin America market at Thiele Technologies.

"Tony will work with all the BW Packaging Systems companies' leadership and sales teams to further develop relationships with our customers and find areas where we can meet multiple needs throughout their packaging line," O'Neill said.

"I am excited about being part of a team that will make a mark in Latin America," Colquitt said. "We have a tremendous opportunity to show the Latin American region that BW Packaging Systems is a total solutions provider on a global scale."

Tony Colquitt will be working in the Mexico and Latin America markets for BW Packaging Systems